MATTE BOX INFORMATION

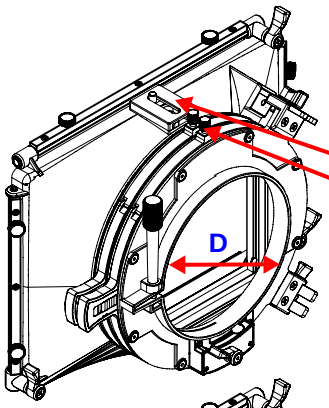

STANDARD MATTE BOX
(P44-?, P45-?, P55-?)

The standard matte box features:
Stage Lock
Filter Holder Locking Screws
Lens mount (back) standard diameter D:
110mm for 4x4 matte box
110mm for 4x5 matte box
136mm for 5x5 matte box

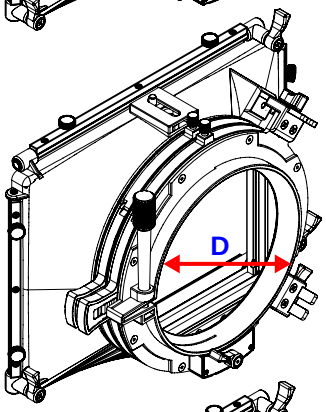

WIDE ANGLE MATTE BOX
(P45-1-W, P45-2-W)

The wide angle matte box applies to 4x5 matte box and has the same features as the standard matte box but larger lens mount (back).
The 4x5 Wide Angle matte box has 136 mm diameter back, using the 5x5 standard lens inserts.

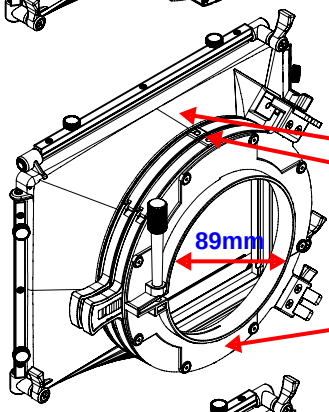

SONY HDR\HVR MATTE BOX
(P44-1-S, P44-2-S)

This matte box is a modified 4x4 matte box.
The Stage Lock and the
Filter Holder Locking Screws have been removed not to interfere with the microphone of the camera.
The lens mount (back) is machined to 89 mm diameter and fits the camera lens without the need of lens insert.
The matte box does not have support rods adapter.

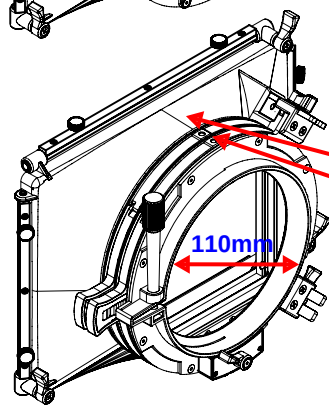

UNIVERSAL WIDE ANGLE MATTE BOX
(P44-1-UW, P44-2-UW)

The universal wide angle matte box applies to 4x4 size matte box.
The Stage Lock and the
Filter Holder Locking Screws have been removed
The matte box has the 110mm diameter lens mount (back) and
It will fit any lens, including Sony HDR\HVR or other mini DV cameras by using the corresponding lens insert.
It can also be mounted on supporting rods.